Partdrawing for DHG181ZK - Heteluchtpistool

Model No.DHG181 CORDLESS HEAT GUN

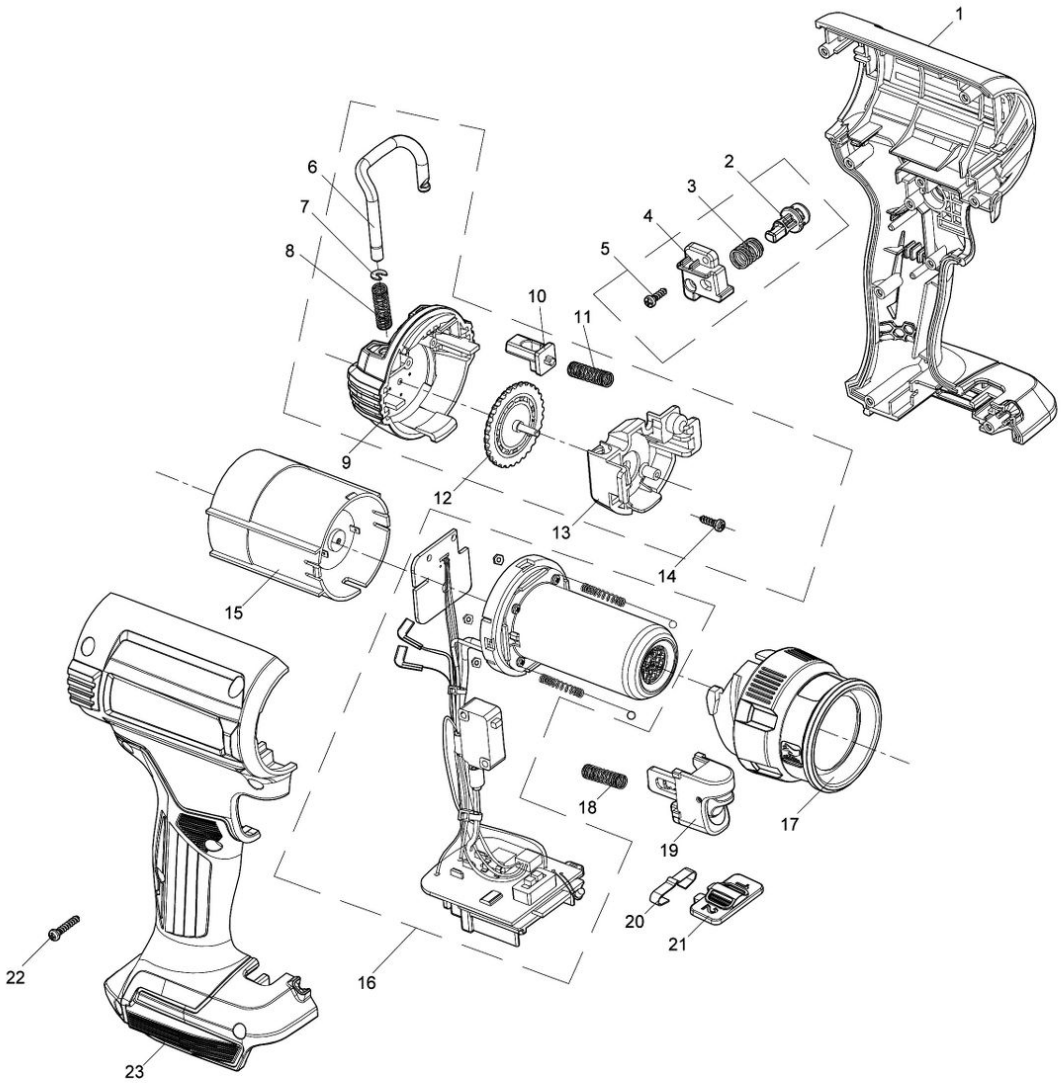

Partdrawing for DHG181ZK - Heteluchtpistool

Nr.	Part nr.	Name
001	PR00000420	Behuizing DHG181
002	PR00000380	A/U knop DHG180
003	PR00000381	Drukveer 9 DHG180
004	PR00000382	Frame DHG180
005	PR00000293	Parker 2,9x10 DHG180
006	PR00000383	Draaghaak DHG180
007	PR00000384	Borgring E-4 DHG180
008	PR00000385	Veer 6mm DHG180
009	PR00000421	Achterkap DHG181
010	PR00000422	Draaghaak DHG181
011	PR00000388	Veer 5mm DHG180
012	PR00000423	Draaiknop DHG181
013	PR00000425	Afdekkap binnen DHG181
014	PR00000293	Parker 2,9x10 DHG180
015	PR00000390	Motor assy DHG180 P
015B	PR00000515	Motor assy DHG180 A
016	PR00000427	Verwarmingelement DHG181 P
016-1	PR00000498	Verwarmingelement DHG181 A
016C10	PR00000424	Moer M2.5 DHG181
016C20	PR00000426	Met.schr. 2.5x10 DHG181
016C30	PR00000428	Drukveer 3 DHG181
017	PR00000392	Voorkap assy DHG180
018	PR00000393	Veer 4mm DHG180
019	PR00000394	Schakelhendel DHG180
020	PR00000429	Bladveer DHG181
021	PR00000430	Hendel DHG181
022	PR00000395	Parker 2,9x16 8stk DHG180
023	PR00000420	Behuizing DHG181
024	PR00000439	Label DHG181