Partdrawing for MR003GZ - Bouwradio

Model No.MR003G JOB SITE RADIO

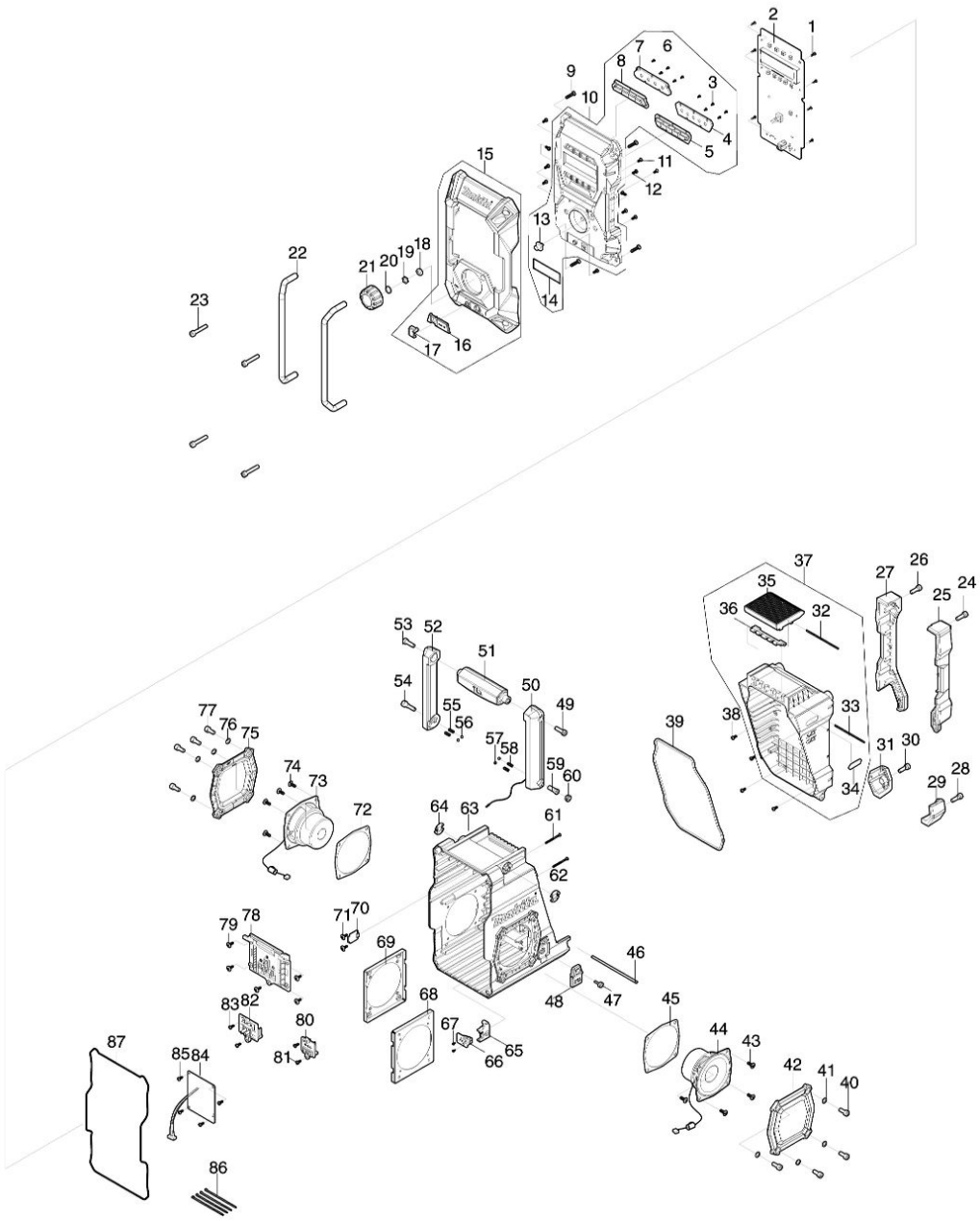

Partdrawing for MR003GZ - Bouwradio

Nr.	Part nr.	Name
001	SE00000521	Schroef M3X8 (Zk) Dmr200
002	SE00000933	Circuit A MR003G
003	SE09090011	Tapschroef 1.7 Bmr100
004	SE00000851	Presetknophouder BLK MR003G
005	SE00000852	Presetknop MR003G
006	SE09090011	Tapschroef 1.7 Bmr100
007	SE00000849	Schakelknophouder BLK MR003G
008	SE00000934	A/U knop MR003G
009	SE09064161	Schroef M4X16 Bmr100
010	SE00000935	Voorhuis MR003G
011	SE00000854	Parker 3x6mm MR001G
012	SE00000521	Schroef M3X8 (Zk) Dmr200
013	SE00000855	Schakelknop MR003/4G
014	SE00000856	Pakking MR003/4G
015	SE00000936	Stootrand MR003G
016	SE00000859	Afdekkap rubb jack MR001
017	SE00000860	Afdekkap jack MR001
018	SE00000754	Borgring DMR115
019	SE00000755	Borgmoer DMR115
020	SE21B1110A	Volumeknopring Bmr100
021	SE00000861	Draaiknop MR001
022	SE00000862	Handgreep MR001
023	SE00000709	Schroef 6x33mm DMR115
024	SE09176166	Schroef M6X16 Bmr100
025	SE00000864	Stootrand R MR001
026	SE09176166	Schroef M6X16 Bmr100
027	SE00000863	Stootrand L MR001
028	SE09176166	Schroef M6X16 Bmr100
029	SE00000866	Stootrand R MR001
030	SE09176166	Schroef M6X16 Bmr100
031	SE00000865	Stootrand L MR001
032	SE00000868	Pin 2x84 MR003/4G
033	SE00000539	Pin 2X77Mm Dmr200
034	SE00000872	Label XGT MR003/4G
035	SE00000867	Afdekkap MR003G
036	SE00000536	Sluitplaat Dmr200
037	SE00000870	Batterijkap MR001G
038	SE00000521	Schroef M3X8 (Zk) Dmr200
039	SE00000873	Pakking batt.kap MR001G
040	SE9076146A	Schroef M6X14 Bmr100
041	SE024J9070	Pakking Bmr100/102
042	SE00000874	Speakergaas MR001
043	SE09090023	Schroef M4X12 Bmr100
044	SE00000938	Speaker R MR003G
045	SE00000876	Speakerpakking MR001
046	SE00000877	Montagepin MR001

Partdrawing for MR003GZ - Bouwradio

Nr.	Part nr.	Name
047	SE00000404	Schroef 3X14Mm
048	SE00000878	Afdekkap DC-jack MR001/2G
049	SE00000176	Tapschroef 6X20Mm Bmr102
050	SE00000939	Handgreep R ant MR003G
051	SE00000881	Handgreep MR001G
052	SE00000879	Handgreephendel L MR001G
053	SE00000176	Tapschroef 6X20Mm Bmr102
054	SE00000715	Schroef 6x17mm DMR115
055	SE00000184	Drukveer Bmr102
056	SE09994007	Kogel Bmr100
057	SE09994007	Kogel Bmr100
058	SE00000184	Drukveer Bmr102
059	SE00000716	Schroef 7x16mm DMR115
060	SE00000717	Schroef 10.8x4,5mm DMR115
061	SE00000445	Verzonken Schroef 3X45 Dmr106
062	SE00000888	Handgreepplt R MR001G
063	SE00000942	Achterhuis MR003G
064	SE00000889	Handgreepplt L MR001G
065	SE00000890	DC-jack houder MR001G
066	SE00000944	Printplaat F MR003G
067	SE09090011	Tapschroef 1.7 Bmr100
068	SE00000892	Speakerhouder MR001
069	SE00000892	Speakerhouder MR001
070	SE00000785	Circuit G DMR115
071	SE00000193	Tapschroef 3X10Mm Bmr102
072	SE00000876	Speakerpakking MR001
073	SE00000945	Speaker L MR003G
074	SE09090023	Schroef M4X12 Bmr100
075	SE00000874	Speakergaas MR001
076	SE024J9070	Pakking Bmr100/102
077	SE9076146A	Schroef M6X14 Bmr100
078	SE00000946	Aansluitunit XGT MR003G
079	SE00000193	Tapschroef 3X10Mm Bmr102
080	SE00000947	Aansluitunit CXT MR003G
081	SE00000521	Schroef M3X8 (Zk) Dmr200
082	SE00000948	Aansluitunit LXT MR003G
083	SE00000521	Schroef M3X8 (Zk) Dmr200
084	SE00000949	Printplaat D+M MR003G
085	SE00000521	Schroef M3X8 (Zk) Dmr200
086	SE00000195	W/Ties 100Mm Bmr102
087	SE00000899	Achterhuispak MR001G